REV	DESCRIPTION	DATE	APPROVED
E	REVISED PER ECN 100. JM 1/28/19	1/31/19	JK

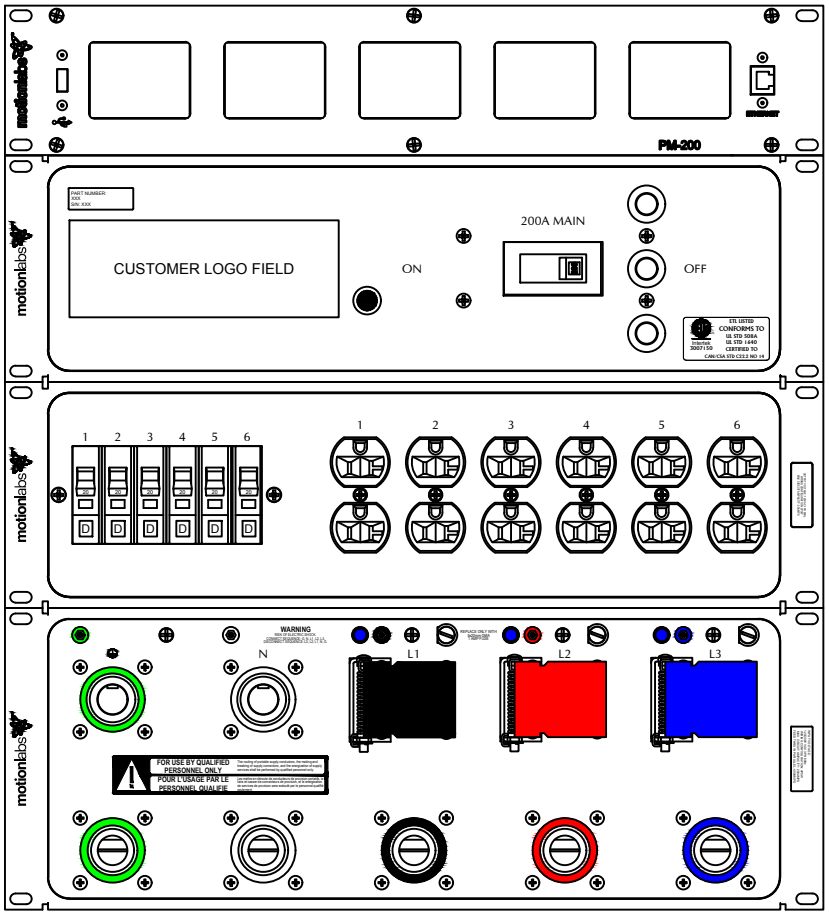

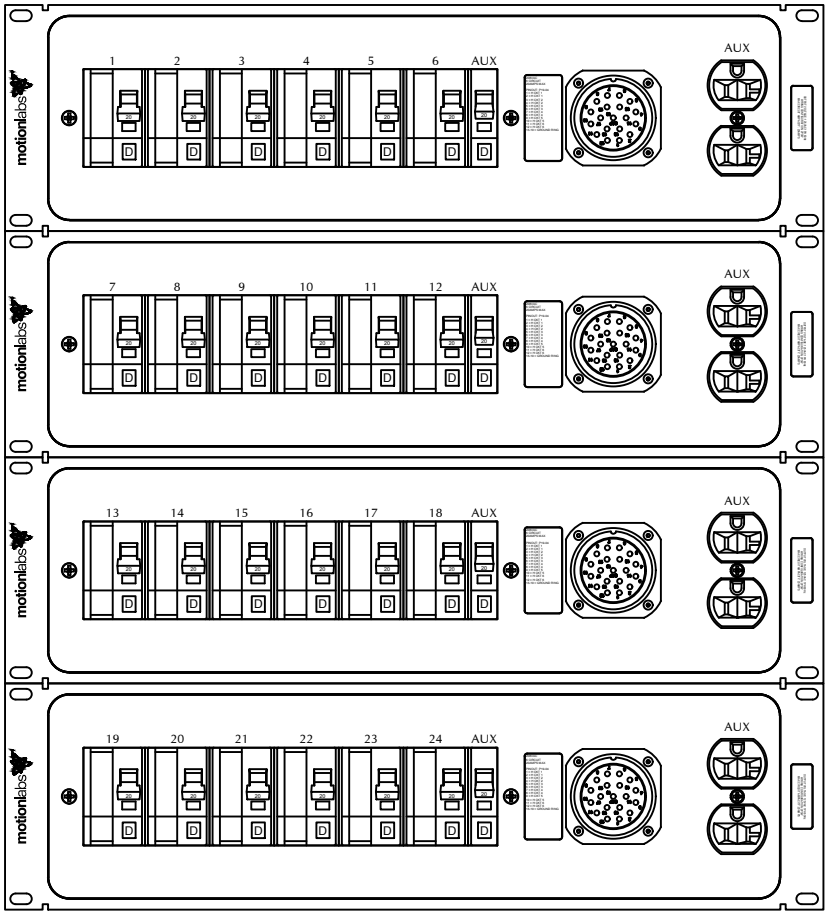

motionlabs
520 Furnace Dock Road Cortlandt Manor, NY 10567

Copyright © 2006 Motion Laboratories, Inc. All Rights Reserved. THIS DOCUMENT IS THE EXCLUSIVE, CONFIDENTIAL PROPERTY OF MOTION LABORATORIES, INC. AND IT SHALL NOT BE REPRODUCED, COPIED, OR USED FOR ANY PURPOSE WHATSOEVER, UNLESS, AND STRICTLY TO THE EXTENT, SUCH IS EXPRESSLY AUTHORIZED BY MOTION LABORATORIES, INC. IN WRITING.

TITLE	DRAWN BY	DATE DRAWN	SIZE	DRAWING NUMBER	REV
PPDS, 200A Main, 12Space, Double Sided	JC	4/29/06	C	1300-200A-12-2-13	E
	CHECKED BY PH	DATE CHECKED 4/29/06			
	MODEL FILENAME & PATH V:\Production\Assembly Drawings\Final Assembly\DOUBLE SIDED\200A MAIN\12 SPACE\1300-200A-12-2-13.dwg			SHEET 1 OF 1	